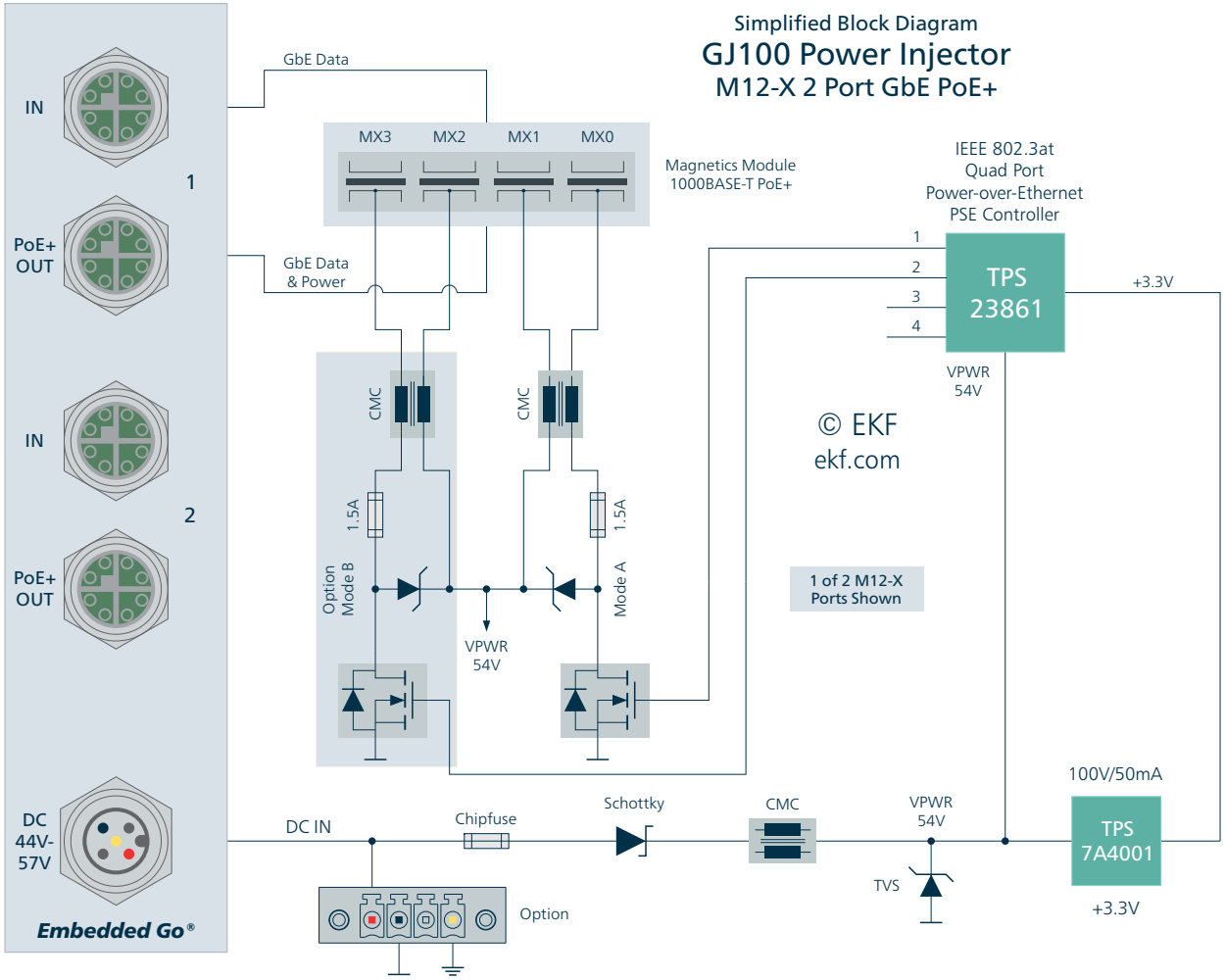
Simplified Block Diagram
GJ100 Power Injector
M12-X 2 Port GbE PoE+
IN
1
PoE+
OUT
IN
2
PoE+
OUT
DC
44V-
57V
Embedded Go®
GbE Data
GbE Data
& Power
MX3
MX2
MX1
MX0
Magnetics Module
1000BASE-T PoE+
IEEE 802.3at
Quad Port
Power-over-Ethernet
PSE Controller
1
2
3
4
TPS
23861
+3.3V
VPWR
54V
CMC
CMC
1.5A
1.5A
Option
Mode B
Mode A
VPWR
54V
© EKF
ekf.com
1 of 2 M12-X
Ports Shown
100V/50mA
DC IN
Chipfuse
Schottky
CMC
VPWR
54V
TPS
7A4001
TVS
+3.3V
Option